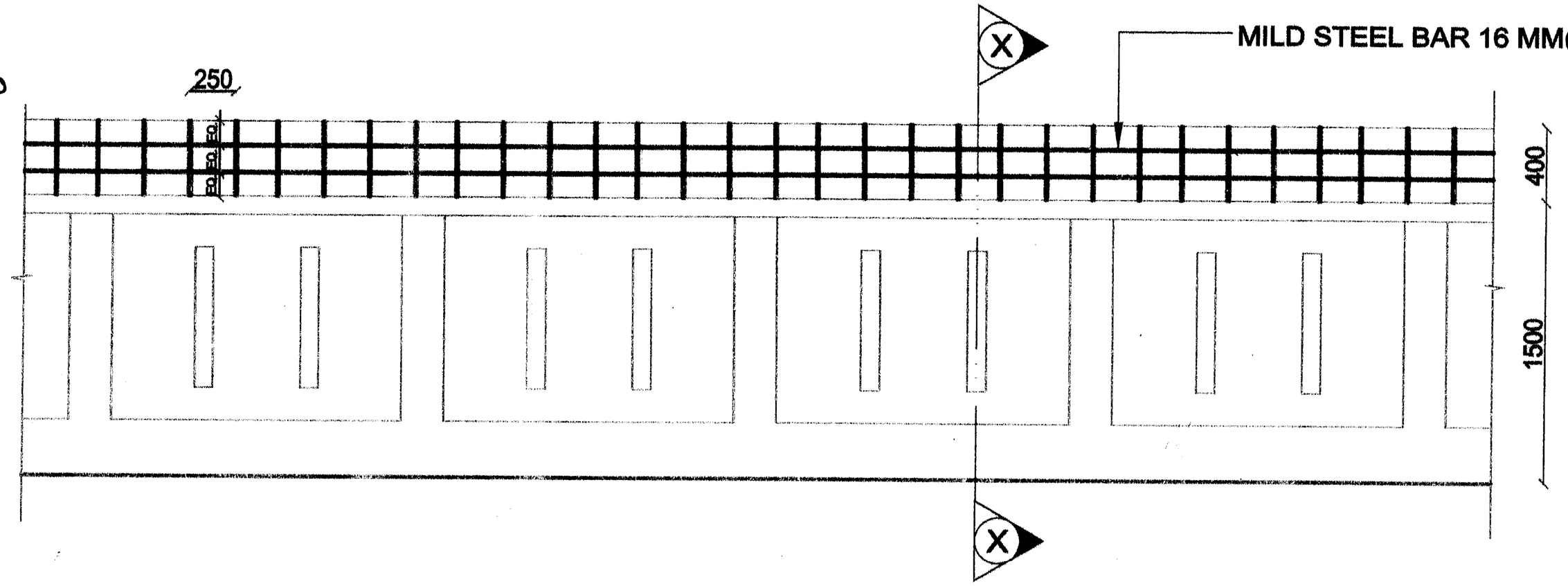

ELEVATION.

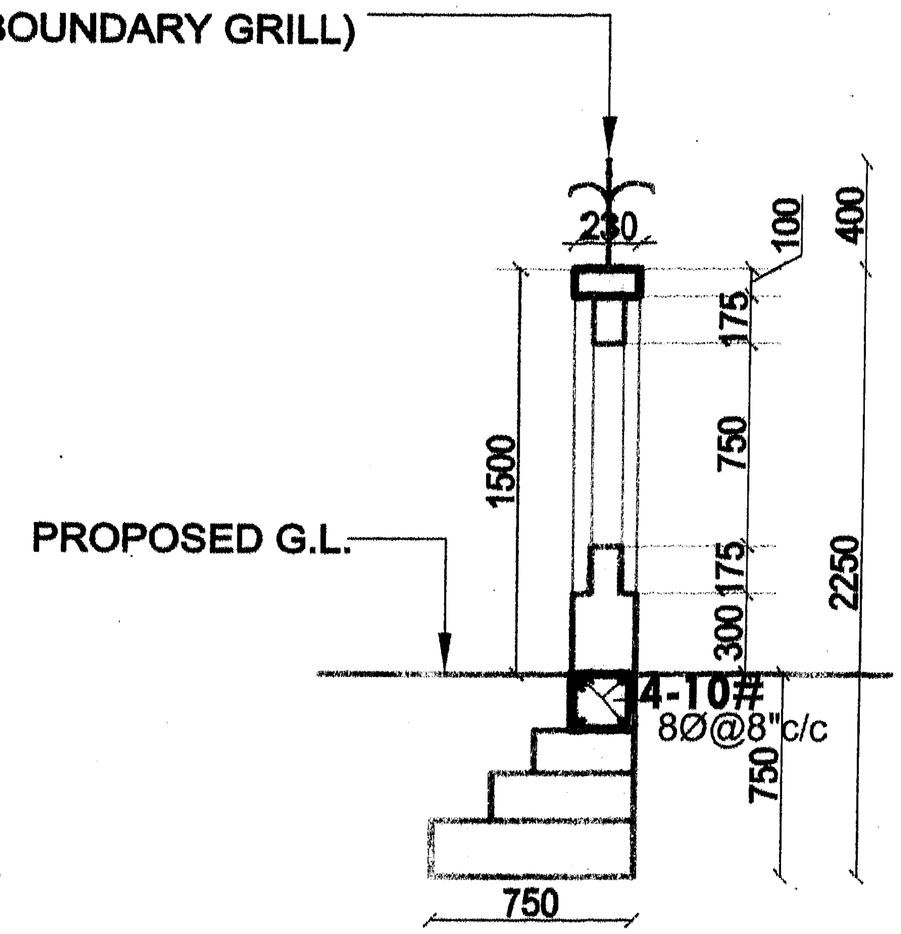

SECTION AT X-X.

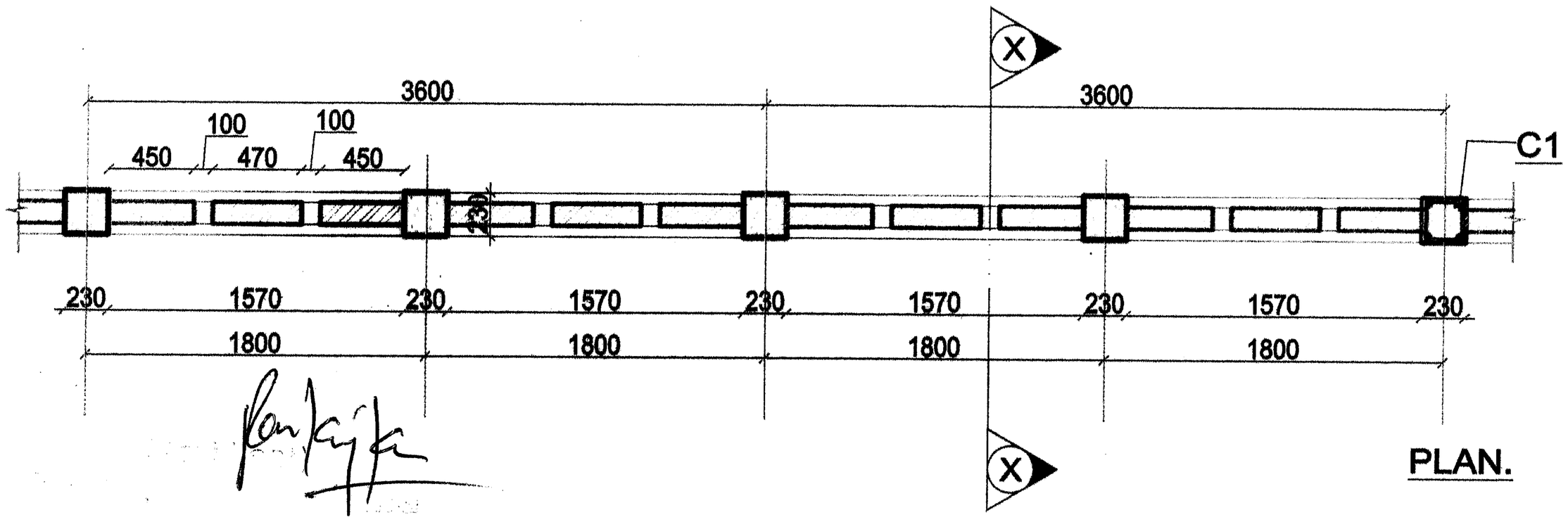

PLAN.

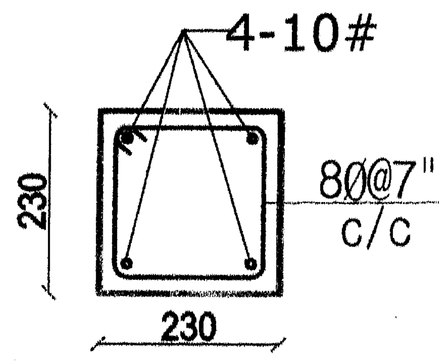

COL.DET.C1-9"x9"

Project:	Drawing Title:	Drawing No:	Date:	Scale:	North:
PROPOSED EXISTING GUEST HOUSE at Plot No. -A-74, NIRALA NAGAR,Lucknow for UNITED INDIA INSURANCE CO.LTD. LUCKNOW	boundary wall	b w/01	28-02-2017	-	
			DRAWN BY:	CHECKED BY: PANKAJ KUMAR	
Client: UNITED INDIA INS. CO. LTD. LKO.	Drawing Type: working drg.	Note: THIS DRAWING IS THE PROPERTY OF PANKAJ KUMAR & ASSOCIATES AND ISSUED FOR THE SPECIFIC PROJECT MENTIONED THEREIN. THIS IS NOT TO COPIED OR USED FOR THE OTHER PROJECTS UNLESS EXPRESSLY PERMITTED BY THE ARCHITECT.			

ARCHITECTS:
PANKAJ KUMAR & ASSOCIATES
architecture engineering interiors valuers landscape construction management vastu

Telephone No: +91 8896585306 9839257635

Address: C-14 BHIKAMPUR COLONY PAPER MILL ROAD NISHATGANJ LUCKNOW

e-mail: ar.pankajkumar@gmail.com